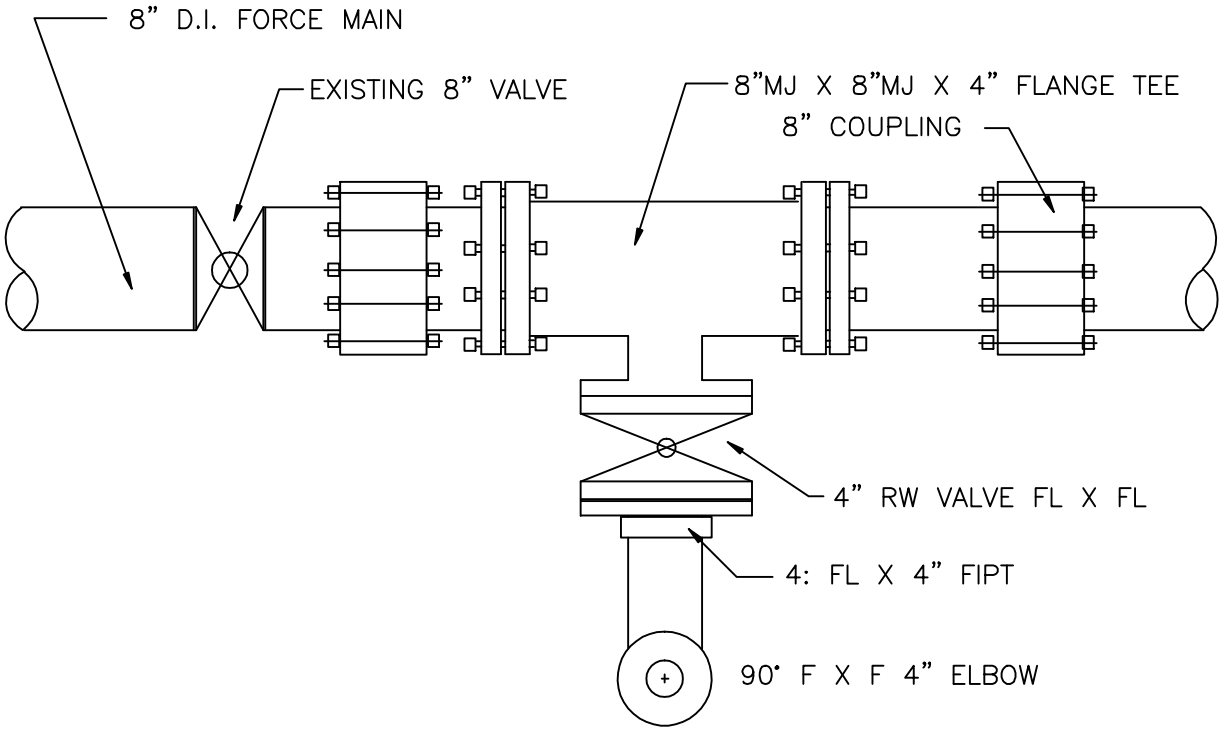

TOP VIEW

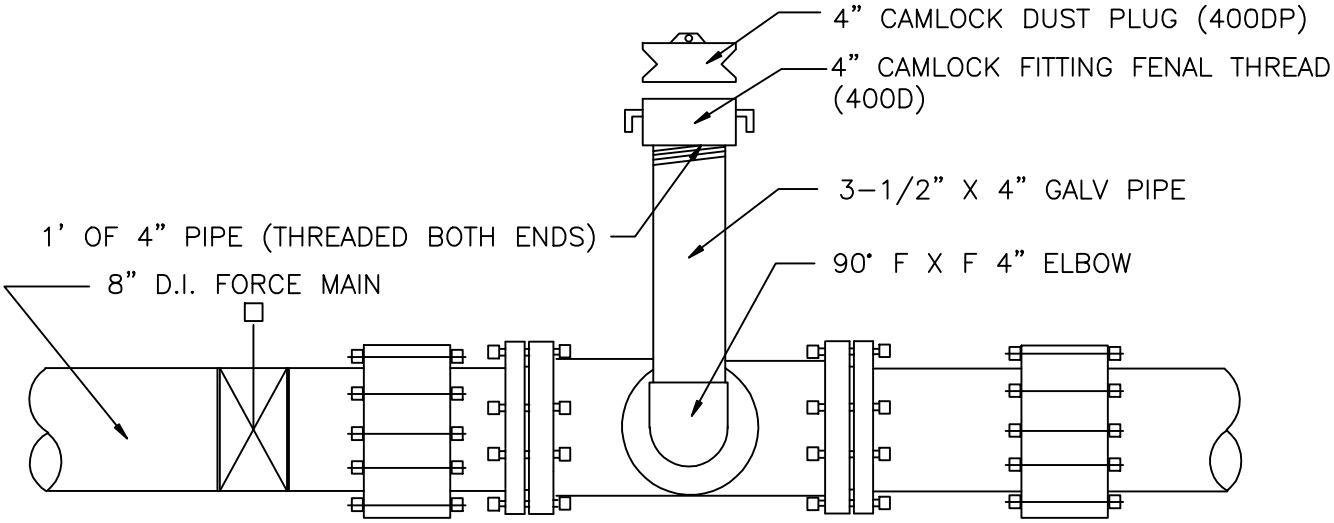

FRONT VIEW

1890–1990

CITY OF EDMONDS

REVISIONS		STANDARD DETAIL		
APPROVED BY	DATE	**SEWER BY-PASS SYSTEM**		
D. GEBERT	8/17/06			
		DATE 7/24/01	SCALE NTS	DWG NO. E6.6