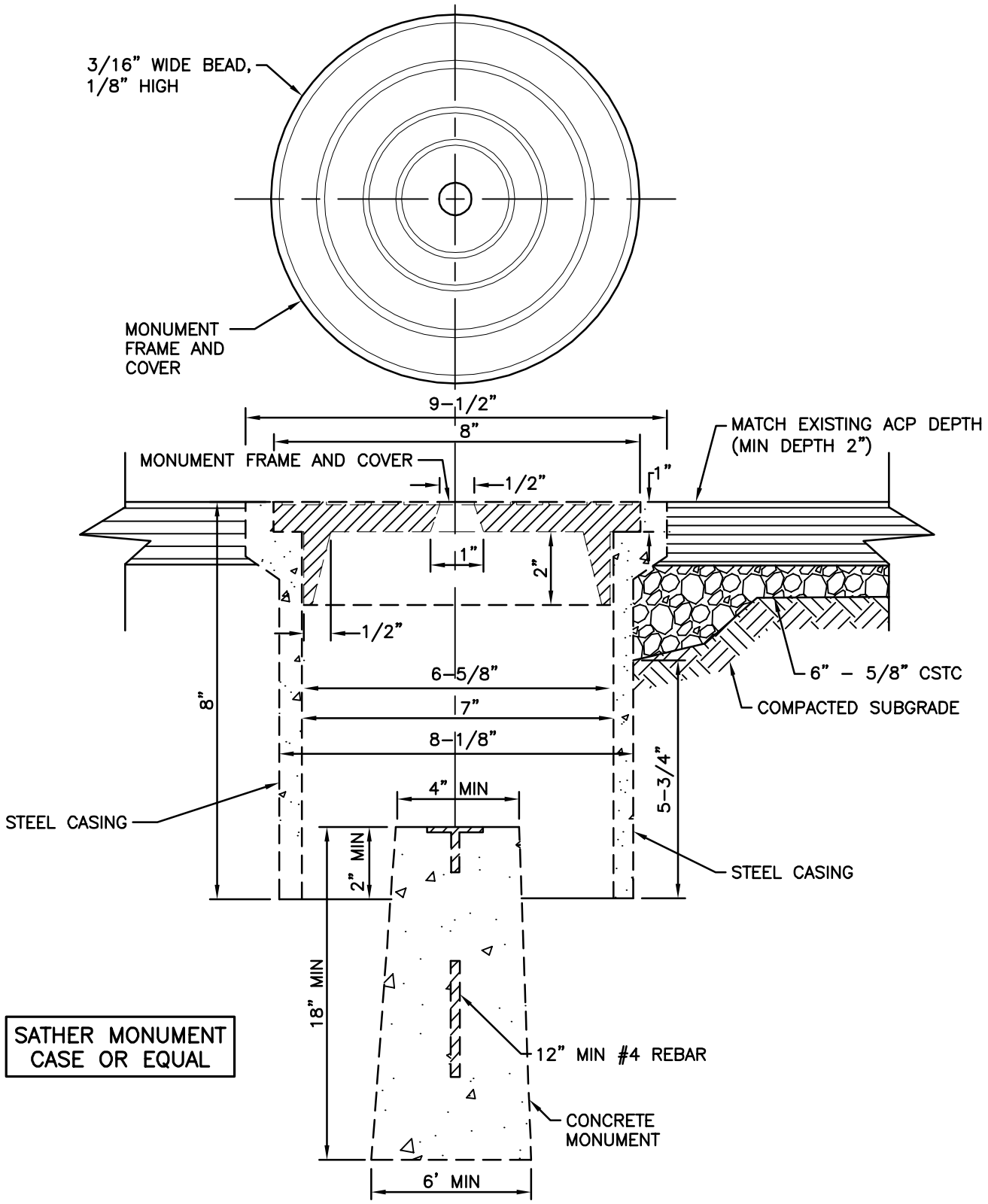

STANDARD CASED CONCRETE MONUMENT

CITY OF EDMONDS
PUBLIC WORKS DEPARTMENT
Est. 1890

STREET MONUMENT AND CASE

REVISION DATE
JANUARY 2018

STANDARD DETAIL
TR–516

APPROVED BY: **R. ENGLISH**